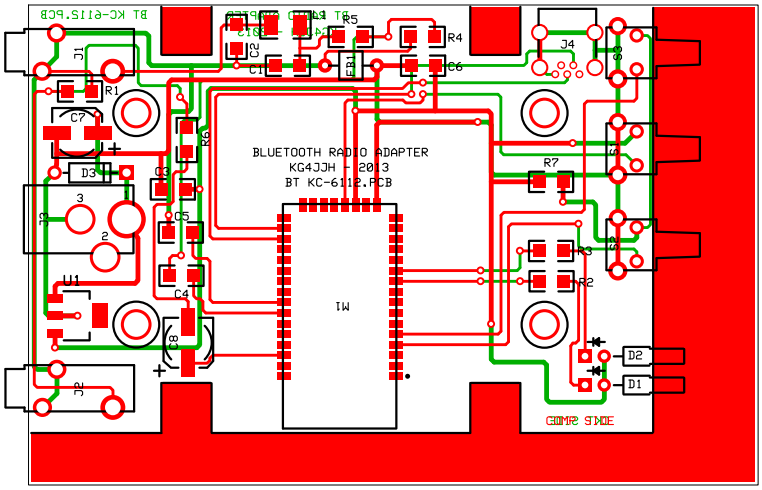
BLUETOOTH RADIO ADAPTER
KG4JJH - 2013
BT KC-6112.PCB
COMP SIDE
J2
U1
C4
C8
C5
C3
R6
D3
C7
J3
3
2
R1
J1
C1
C2
R5
R4
C6
J4
R7
R3
R2
D2
D1
M1